A Secure Image Steganography Method Based on Neural Network

Jasmeen Kaur Pandher
Department of CSE, BBSBEC, Fatehgarh Sahib, Punjab, India
Jasmeenkaur556@gmail.com

Kamalpreet kaur
Assistant Professor, Department of CSE, BBSBEC, Fatehgarh Sahib, Punjab, India
kamalpreethind@gmail.com

Abstract- **Steganography is the term used to describe the hiding of data in images to avoid detection by attackers. Steganalysis is the method used by attackers to determine if images have hidden data and to recover that data. By matching data to an image, there is less chance of an attacker being able to use steganalysis to recover the data. Before hiding the data in an image the application first encrypts it. The proposed method of steganography in this work encodes the secret message in least significant bits of the original image using DWT method, where the pixels values of the encrypted image are modified by the genetic algorithm (GA) and neural network (NN) to retain their statistic characters, thereby making the detection of secret of message difficult. The whole implementation is done in MATLAB using MSE, Time and PSNR parameters.**

Keywords - *Neural Network, Genetic Algorithm, DWT, Image Steganography, PSNR, MSE, Security.*

I. INTRODUCTION

Information hiding relates with communication of data by concealing in and later recovering it through any digital cover media form. The digital cover media can be a photograph, audio-visual, an audio, or merely an ordinary text document. Information hiding is a broad term covering numerous sub classifications. There are three methods: cryptography, watermarking and steganography. Cryptography deals with encryption and decryption of data but its existence cannot be hidden from the third party [13]. Watermarking is not another system. It is a descendent of a procedure known as Steganography, which has been in presence for no less than a couple of hundred years. Steganography is a procedure for covered correspondence. Steganography has originated from the Greek words “steganos” that refers to cover and “graphein” that refers to writing. Thus together it means covered or concealed writing [2, 9].

Steganography aims to keep the existence of the message (in image, video, audio, text etc.) secret in the cover image. The Steganography procedure comprises three important components: the data to be hidden (here, image), the cover file, and the resulting stego file (after embedding the secret image into cover file). Steganography is the art and science of hiding information such that its presence cannot be detected. The secret information is hidden in some carrier file and then transmitted. The carrier file can be an image, Audio file, text file, video file, etc. Steganography is in contrast to cryptography where the existence of the hidden message is known, but the content is intentionally obscured. Steganography disguises the message to be hidden thus rendering it invisible. Hence the hidden message can be deciphered only if its existence is known. Steganography provides secure communication by embedding payload [7].

This paper proposes a method to embed data in Discrete Wavelet Transform coefficients using a mapping function based on Genetic Algorithm in 4x4 blocks on the cover image and, it applies the neural network after embedding the message to maximize the PSNR.

Cover medium + message + secret key = stego-medium

A. DISCREET WAVELET TRANSFORM (DWT)

The discrete wavelet transform is a valuable way designed for signal exploration as well as picture handling, chiefly in multi-resolution description. Wavelets are described as the functions obtained over a fixed interval and have zero as an average value. This transformation is an extremely necessary way to be used for signal investigation as well as image processing, mainly for multi-resolution demonstration. It may crumble signal into different components in the frequency sphere [10]. One-dimensional discrete wavelet transform (1-D DWT) decomposes an input into two components (the average component and the detail component). The 2-dimensional (2-D) DWT distributes an input picture into four type of sub-bands, single average component (LL) and three detail components (LH, HL, HH) as shown in Figure [6].

LL	HL
LH	HH

Figure 1. 2D DWT components

DWT decompose an image using following equation:

$$\phi 2\ (x, y) = \phi 1\ (x)\ \phi 1(y) \qquad (1)$$

B. GENETIC ALGORITHM (GA)

Genetic Algorithm was first described by John Holland in the 1960. It is a technique for optimization and search, which is based on the Darwinian principles of survival and reproduction (Goldberg 1989). It has three operations basically i.e. Selection, Genetic Operation, and Replacement. Genetic algorithms (GAs) are computer programs that take off the processes of biological growth in order to explain problems and to make evolutionary systems [11, 12]. The GA processes populations of chromosomes (individuals), which replace one population with another successively. Specify the problem to be solved and a bit-string illustration for candidate solutions, the simple GA works as follows:

STEP 1: Encrypt the secret message

STEP 2: Generate random initial population of size L (L=length of the Secret Message) with each individual member having n chromosomes (suitable solutions for the problem).

STEP 3: [Fitness] Evaluate the fitness f(x) of each chromosome individual in the population.

STEP 4: [New population] Create a new population by repeating following steps until the new population is complete.

i. [Selection] Select two parents from the population with the best fitness level (the better fitness, the bigger chance to be selected).

ii. [Crossover] with a crossover probability, cross over the parents to form new offspring (children). If no crossover was performed, offspring is an exact copy of parents.

iii. [Mutation] with a mutation probability, mutate new offspring at each locus (position in chromosome).

iv. [Accepting] Place new offspring in a new population.

STEP 5: [Replace] Use new generated population for a further run of algorithm.

STEP 6: [Test] if the end condition is satisfied, stop and return the best solution to current population.

STEP 7: [Loop] Go to step 4 [11, 15].

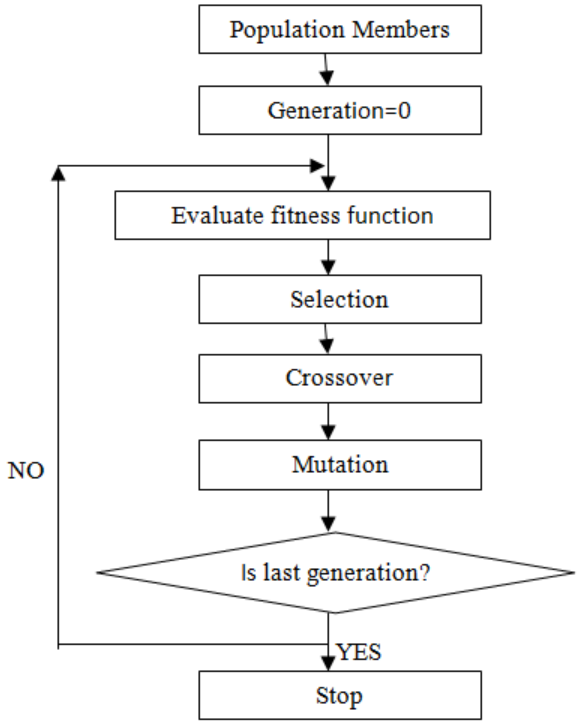

Figure 2. Basic GA procedure

LSB (Least Significant Bit)

LSB is the lowest significant bit in an image pixel. The LSB method embeds the secret in the least significant pixel values. LSB method requires the 8 bytes of pixel to hold one message byte [8, 14].

C. NEURAL NETWORK (NN)

Neural network is a machine learning approach that a human brain and consists of a number of artificial neurons. Each neuron in ANN receives a number of inputs. The simplest type of Neural Network is ANN (Artificial Neural Network). ANNs are designed closely to the neural structure of the brain.

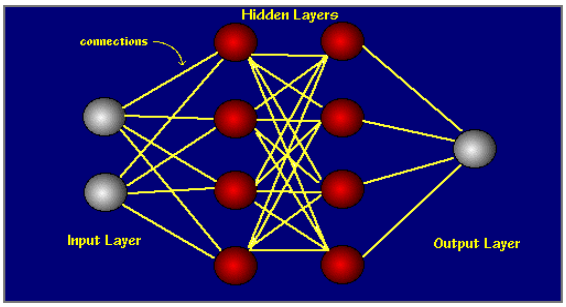

Figure 3. Neural Network

Neural network mainly consists of the layers. Layers are made up of nodes. Neural networks are typically organized in layers [1, 4]. Layers are made up of a number of interconnected ‘nodes’. There are mainly three types of layers in the neural architecture: Input layer, hidden layer and output layer. Patterns are presented to the network via the ‘input layer’, which communicates to one or more ‘hidden layers’ where the actual processing is done via a system of ‘weighted connections’. On the basis of the output layer weights are assigned to get output accordingly to input layer. The hidden layers then link to an 'output layer' where the answer is output as shown in the graphic below [5].

II. PROPOSED WORK

The ability to protect and secure information is vital to the growth of electronic commerce and to the growth of the Internet itself. Many people need or want to use communications and data security in different areas. This is an important issue related to the Internet users.

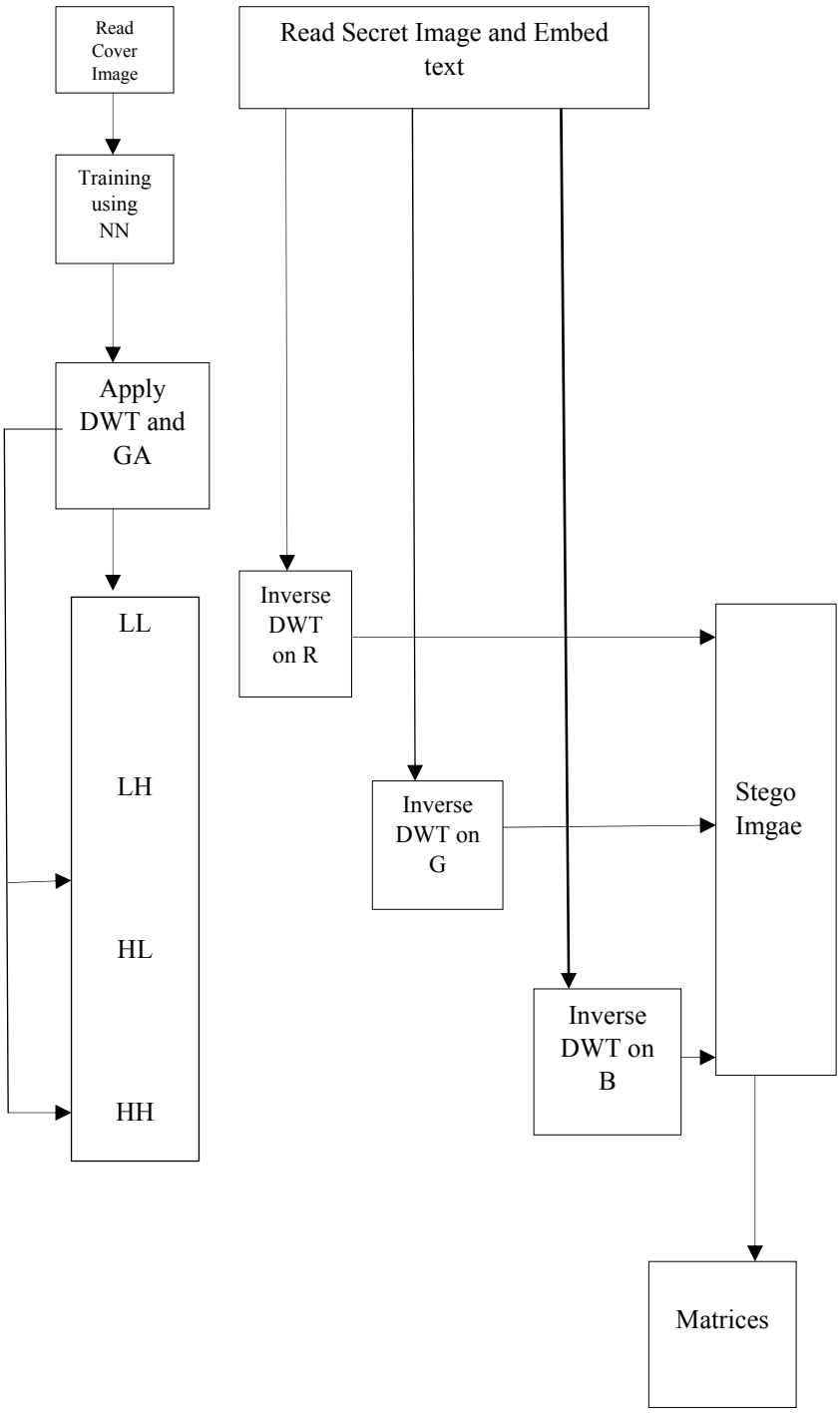

Figure 4. Proposed Work

Steganography refer to a technique where some sort of content is hidden into similar or dissimilar format. In such a contrast a lot of algorithms have been used already which possess good results like DWT, LSB, Neural Network, SQL Queries etc [15]. All these algorithms work efficiently but these have some drawbacks according to database of images.

So, the existing work will use wavelet transformation along with Genetic algorithm to check the performance of the hiding capacity of the system in addition with neural network in hybridization.

The problem of this research work is to optimize the current architecture by introducing GA with Neural Network.

Embedding Procedure

1. Start
2. Read Cover image.
3. Calculate size of the image.
4. Read the secret message.
5. Prepare message vector.
6. Training using NN.
7. Decompose image by DWT and GA.
8. Generate pseudo random number.
9. Modify detailed coefficients like horizontal and vertical coefficients of wavelet decomposition.
10. Apply inverse DWT.
11. Display stego image.

Extraction Procedure

1. Read the cover image.
2. Read stego image.
3. Decompose image by DWT.
4. Generate message.
5. Apply Neural Network.
6. Find correlation between original and modified coefficients.
7. Display secret message.
8. Evaluate PSNR, MSE and Time.

III. RESULT AND ANALYSIS

Simulations are carried out on images of different formats viz. JPEG and JPG using MATLAB 2012. Steganograms are generated using discrete wavelet transforms. Performance analysis of these two transforms is done based on parameters PSNR, MSE and time.

Peak Signal to Noise Ratio (PSNR): The PSNR depicts the measure of reconstruction of the transformed image. This metric is used for discriminating between the cover and stego image [14, 15].

$$PSNR = 10.\log_{10} (MAX^2 / MSE) \quad (2)$$

Mean Square Error (MSE): MSE can be defined as the measure of average of the squares of the difference between the intensities of the stego image and the cover image. It is popularly used because of the mathematical tractability it offers. It is represented as follows:

$$MSE = \frac{1}{mn} \sum \sum [(I, j) - K (I, j)]^2 \quad (3)$$

Where f (i, j) is the original image and k (i, j) is the stego image. A large value for MSE means that the image is of poor quality and vice-versa [11].

Time: Here time shows the simulation time during the processing. Time is very necessary to generate the Stego Image after embedding and extraction process. So we calculate the overall time for simulation.

Table1. Matrices values

Image	Previous PSNR	Proposed PSNR
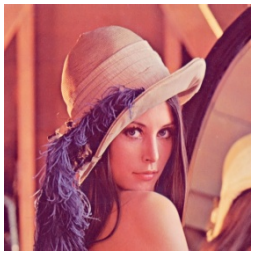	38.46	83.96
	38.47	72.13
	38.54	79.86

The comparisons of the above methods are done on the basis of the PSNR values (from equations (2) and (3)) of the optimized image obtained by the applying the proposed neural network with respect to the corresponding cover images. The effectiveness of our proposed method has been depicted in table 1.

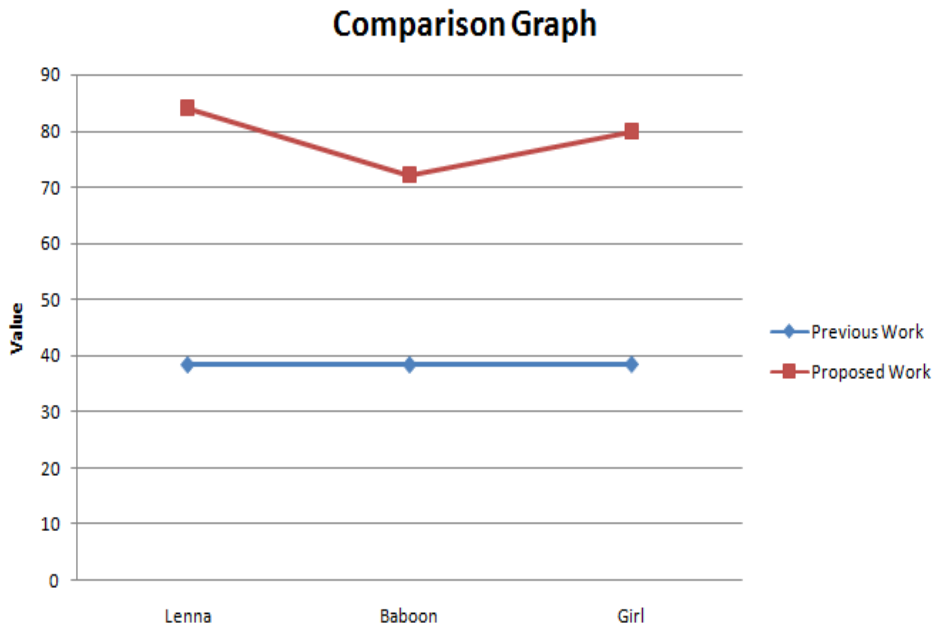

Fig. 5 PSNR Comparison Graph

IV. CONCLUSION

Steganography is an art of concealing the presence of intended secret messages. We only discussed here Neural Networks based Methods. Because today AI Based computer are used very rapidly in various fields, and NN techniques are used widely. The performance of various methods can be further improved with the use Neural Networks Methods. In this paper, we have proposed Genetic Algorithm and neural network based Steganography using Discrete Wavelet Transform. Wavelet analysis is used as it reveals finer details of the image as compared to Fourier Transforms. Here, the payload is transformed from spatial domain to the Wavelet domain. The DWT coefficients are embedded into spatial domain of cover image by using Genetic Algorithm, which has increased capacity. The neural network algorithm has to be shared between the sender and receiver through a protected channel. This scheme of neural Network accepts N images as input pattern which has to be trained. Signal to Noise Ratio (PSNR) and Mean Square Error (MSE) itself are proving that the proposed technique for Steganography is good one. The proposed algorithm gives better performance viz., Mean Square Error, Time and Peak Signal to Noise Ratio than the earlier techniques. However, there is scope for enhancement of robustness.

In future we can also use error back propagation neural network algorithm with optimization to improve Steganography performance of today new era of computer Techniques which is mostly based on Artificial Intelligence.

References

[1] Ms. Dharmistha & D. Vishwakarma, “Genetic Algorithm based Weights Optimization of Artificial Neural Network,” International Journal of Advanced Research in Electrical, Electronics and Instrumentation Engineering, Vol. 1, No. 3, pp 206-211, 2012.

[2] Akshay Phadke & Aditi Mayekar, “Steganography Technique using Neural Network,” International Journal of Computer Applications, Vol. 82, No. 7, pp 39-42, 2013.

[3] Barnali Gupta Banik & Samir K. Bandyopadhyay,“A DWT Method for Image Steganography,” International Journal of Advanced Research in Computer Science and Software Engineering, Vol.3, No. 6, pp 983-989, 2013.

[4] H S Manjunatha Reddy & K.B Raja, “High Capacity and Security Steganography Using Discrete Wavelet Transform,” International Journal of Computer Science and Security, Vol. 3, No. 6, pp 462- 472, 2014.

[5] Imran Khan, “An Efficient Neural Network based Algorithm of Steganography for image,” International Journal of Computer Technology and Electronics Engineering, Vol. 1, No. 2, pp 63-67, 2014.

[6] Kamal & Lovnish Bansal, “Enhancement Key of Cryptography And Steganography Using RSA And Neural Network,” International Journal of Advanced Research in Computer Engineering & Technology, Vol. 3, No. 5, pp. 1707-1710, 2014.

[7] Parul, Manju & Dr. Harish Rohil, “Optimized Image Steganography using Discrete Wavelet Transform (DWT),” International Journal of Recent Development in Engineering and Technology, Vol. 2, No. 2, pp 75-81, 2014.

[8] Rehana Begum R.D & Sharayu Pradeep, “Best Approach for LSB Based Steganography Using Genetic Algorithm and Visual Cryptography for Secured Data Hiding and Transmission over Networks,” International Journal of Advanced Research in Computer Science and Software Engineering, Vol. 4, No. 6, pp 114-119, 2014.

[9] Amandeep Kaur, Rupinder Kaur & Navdeep Kumar, “A Review on Image Steganography Techniques,” International Journal of Computer Applications, Vol. 123, No. 4, pp 20-24, 2015.

[10] Anamika Sharm & Ajay Kushwaha, “Image Steganography Scheme Using Neural Network in Wavelet Transform Domain,” International Journal of Scientific Engineering and Research, Vol. 3, No. 10, pp 153-158, 2015.

[11] Fatma Abdalla Mabrouk Kheiralla & Dr Mudawi Mukhtar Elmusharaf, “Genetic Algorithm the Dawn of a New Revolution in Computer Science,” International Journal of Innovations & Advancement in Computer Science, Vol. 4, No. 11, pp 8-13, 2015.

[12] Gangeshawar & James Attri, “Optimizing Image Steganography using Genetic Algorithm,” International Journal of Engineering Trends and Technology, Vol. 24, No. 1, pp 32-38, 2015.

[13] Masoud Nosrati, Ali Hanani & Ronak Karimi, "Steganography in Image Segments using Genetic Algorithm," Fifth International Conference Advanced Computing & Communication Technologies, pp 103-107, 2015.

[14] Nahla fadel Alwan & Nisreen Najm Abdulwahi “PSNR Comparison for LSB Steganography using Genetic Algorithm or Image Restoration,” International Journal of Recent Scientific Research, Vol. 6, No. 10, pp 6830-6835, 2015.

[15] Rinita Roy & Sumit Laha, “Optimization of stego Image retaining secret information using Genetic Algorithm with 8-connected PSNR,” 19th International Conference on Knowledge Based and Intelligent Information and Engineering Systems, pp 468-477, 2015.